ASSEMBLY INFORMATION

for the

eco

Easy Corner

Door Mounted for a Small Corner Solution

Contents:

- Parts Identification 2
- Assembly Instrucitons 3-5

V:1.00-2020

Easy Corner

elite

Part Identification

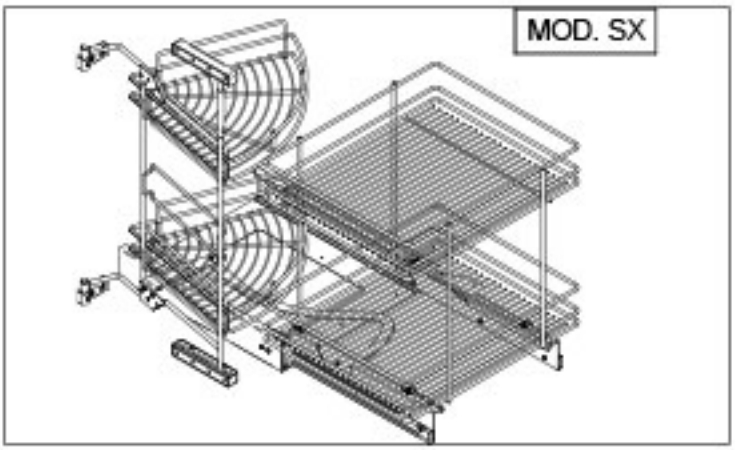

2 x **30kg** max load

2 x **10kg** max load

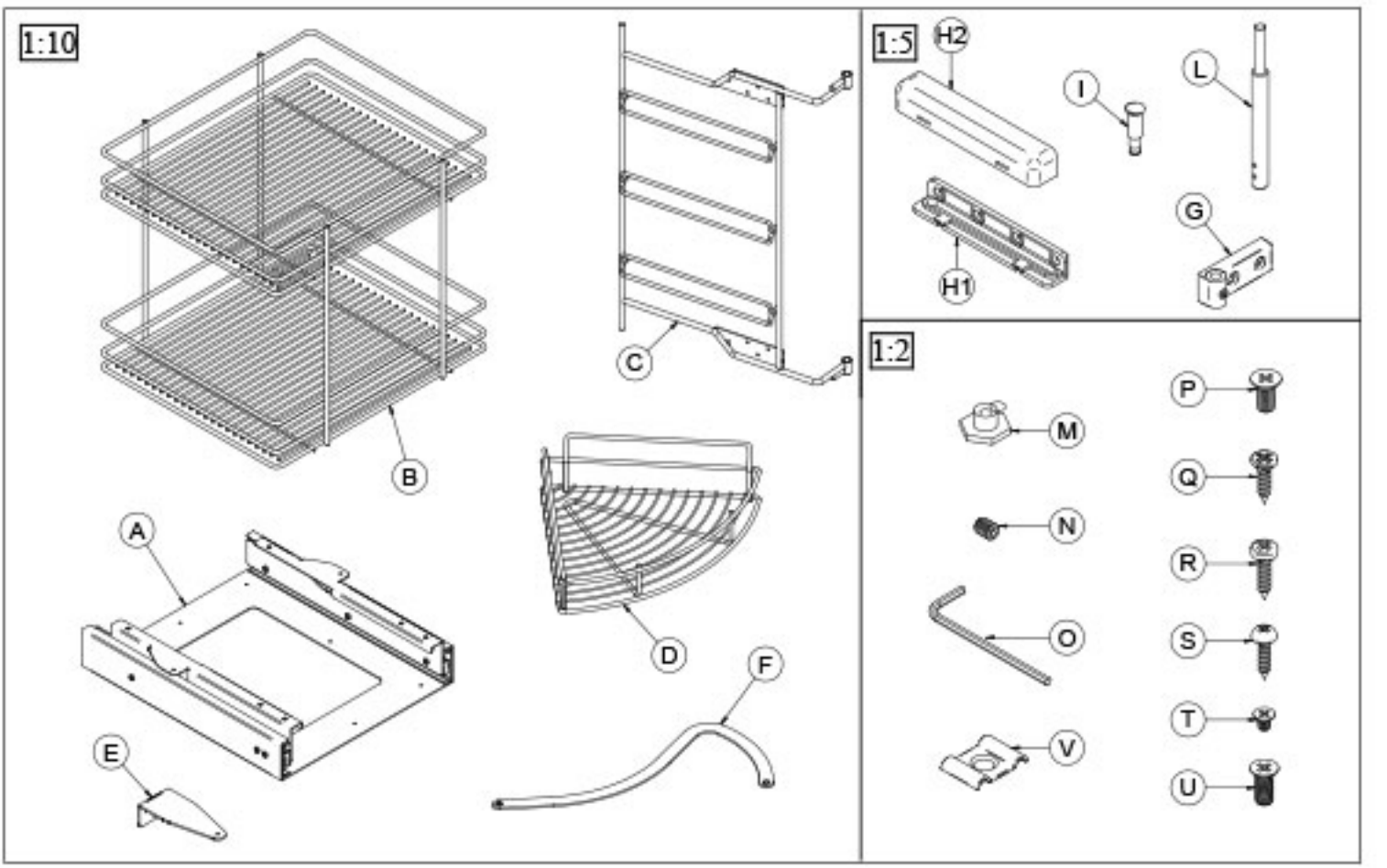

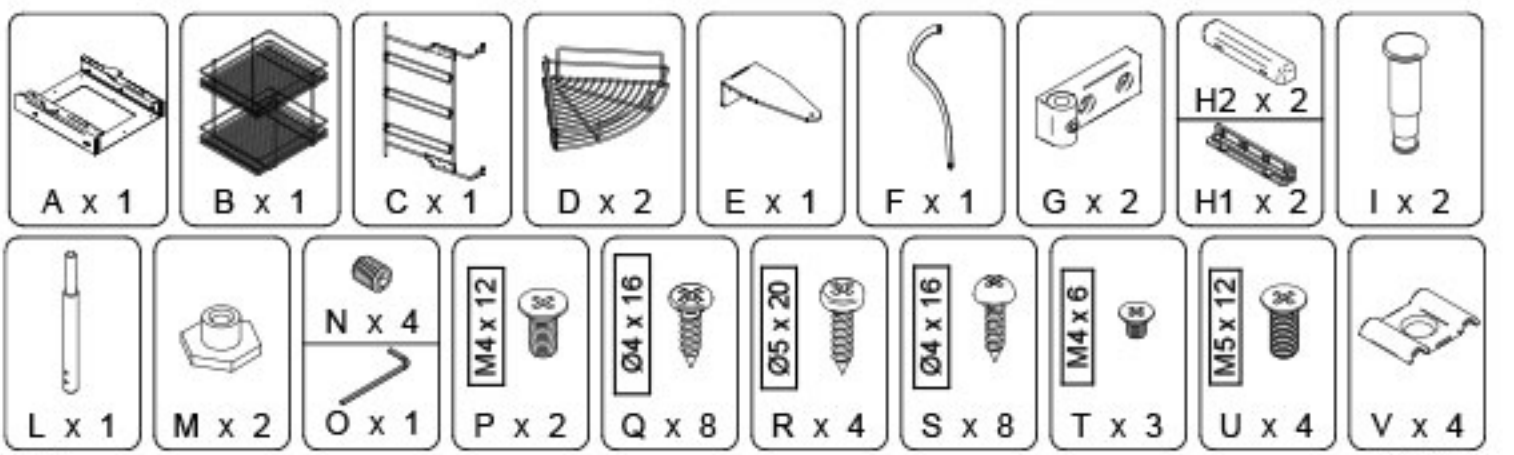

Assembly Instructions

1

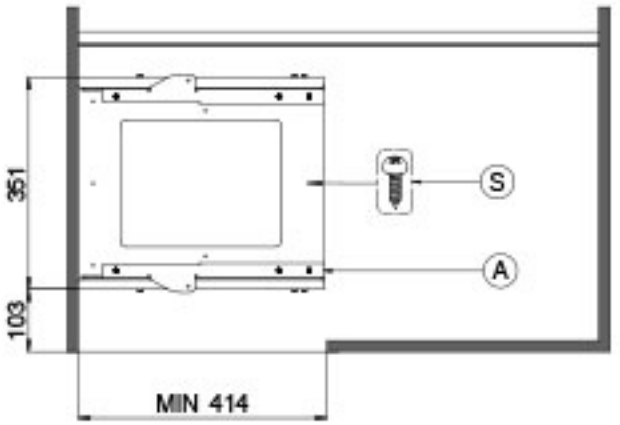

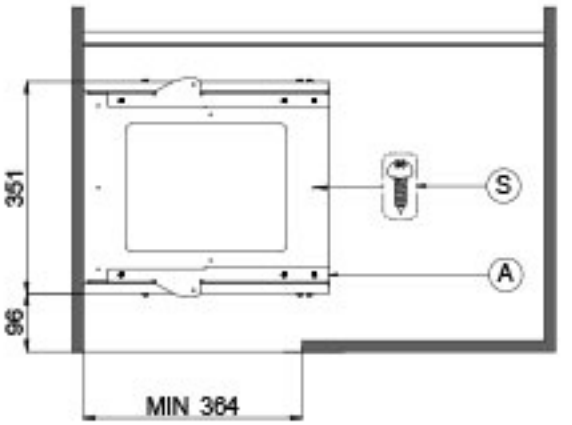

2

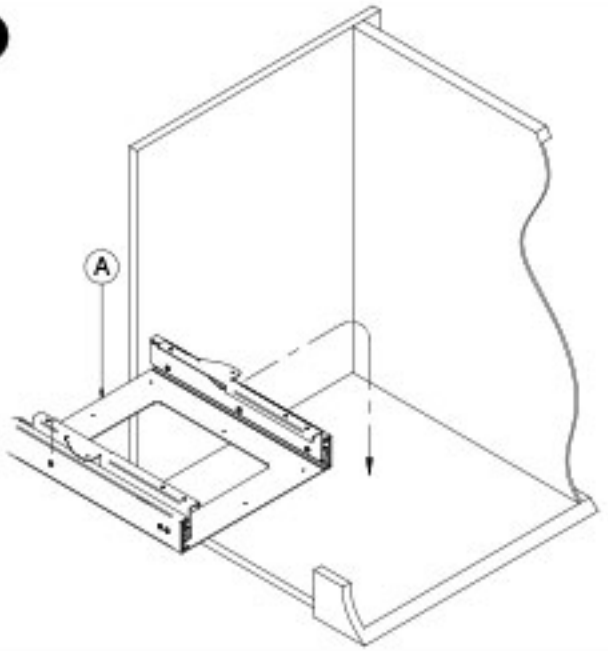

3

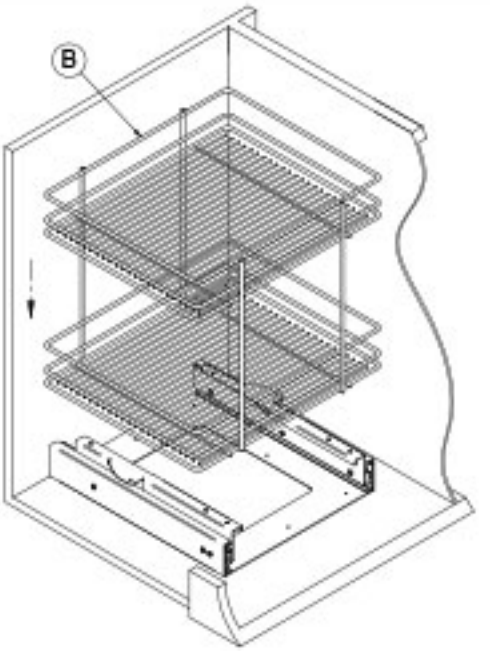

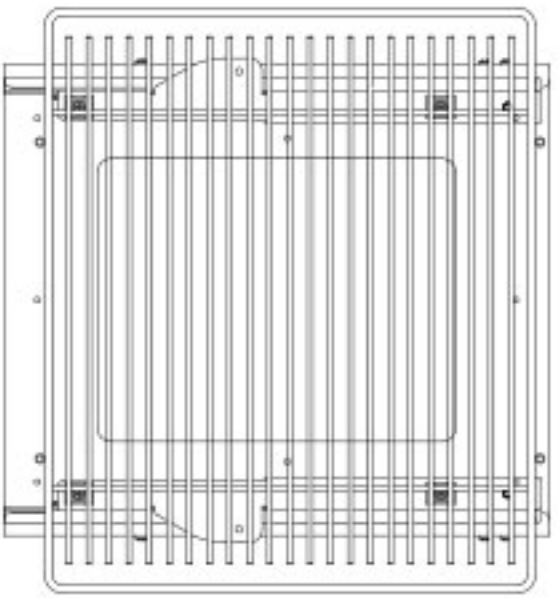

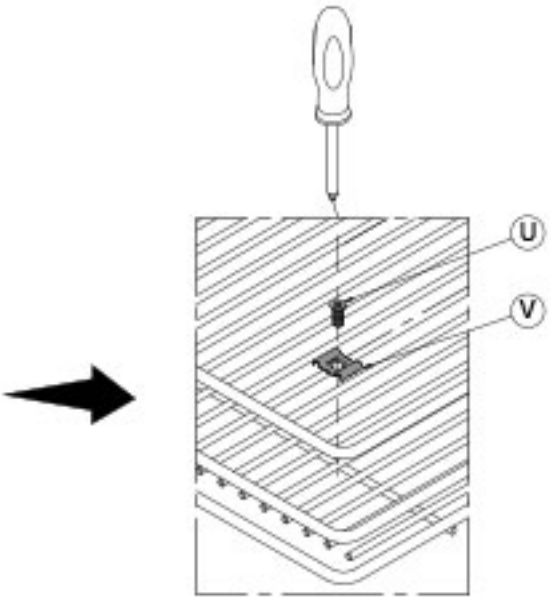

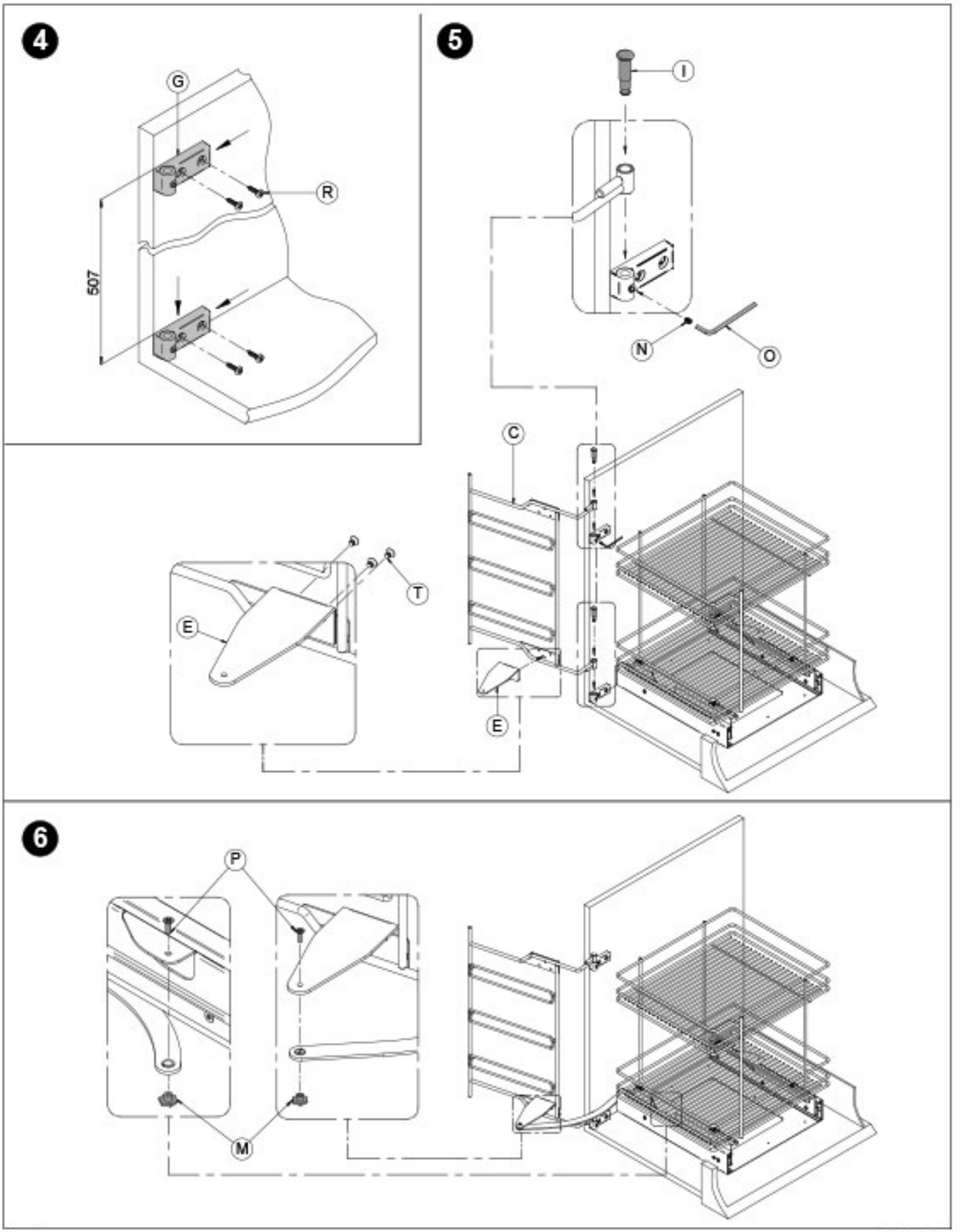
4
G
R
507
5
I
N
O
C
T
E
E
6
P
M

Assembly Instructions

7

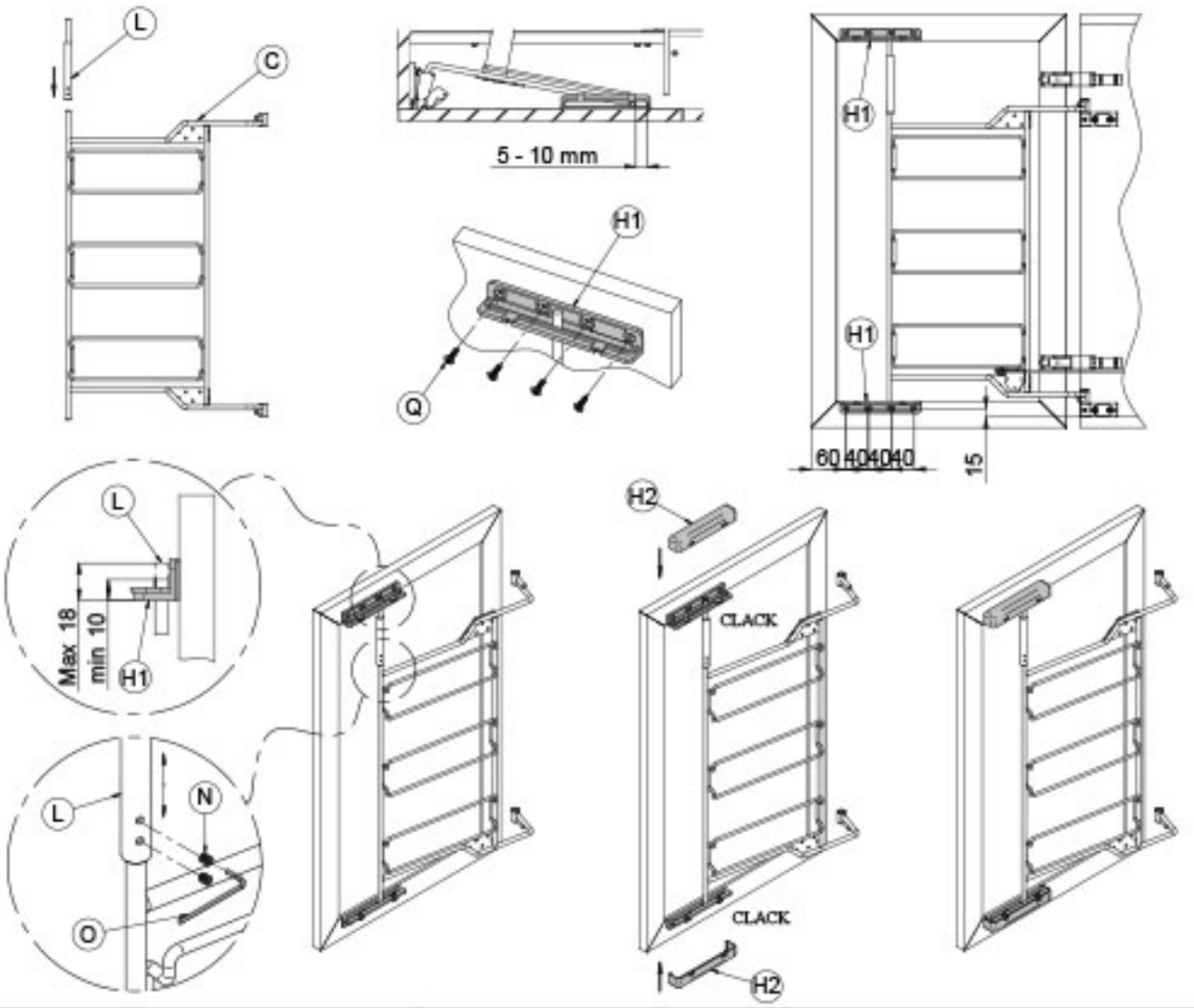

8

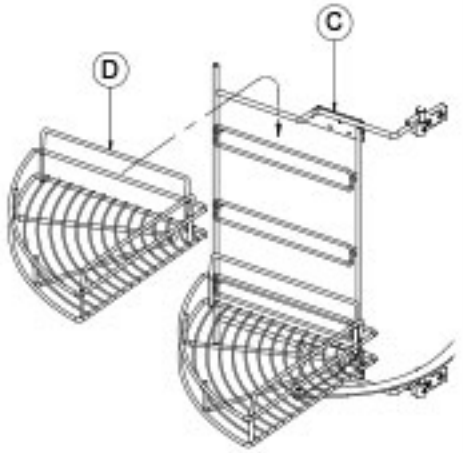

9

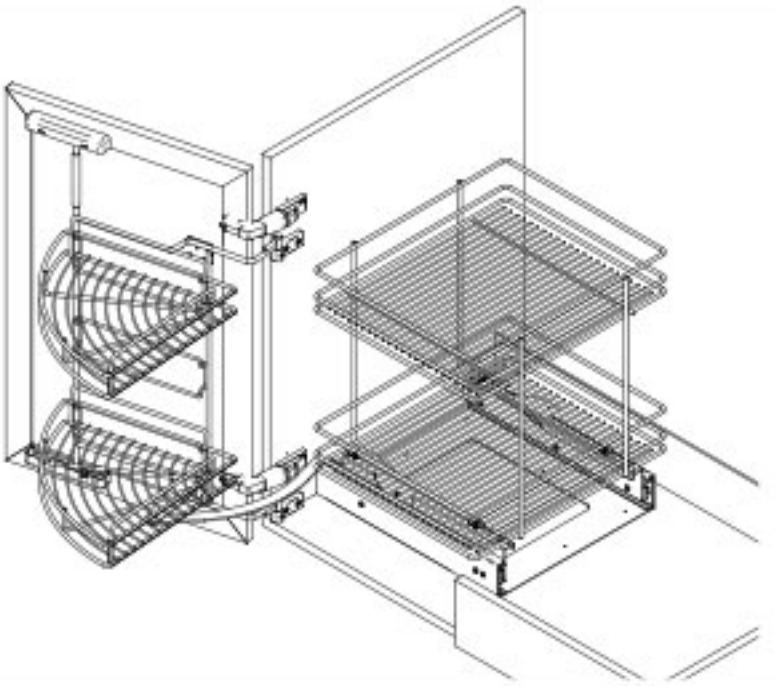

NB. The sizes are approximate and may vary depending on the unit.

MACHINERY - MATERIALS - COMPONENTS - ADHESIVES - FOILS - PANELS - DOORS

NEY Ltd (Head Office)
Stonebridge Trading Estate
Sibree Road
Coventry
CV3 4FD

t 024 7630 8100
f 024 7630 8101
e sales@ney.co.uk

NEY Ireland
Unit 22 Blaris Ind Estate
Altona Road
Lisburn
BT27 5QB

t 028 92 673 000
f 028 92 672 999
e ireland@ney.co.uk

NEY Scotland
Block 2 Units 1-2-3
Bandeath Ind Est
Throsk, Stirling
FK7 7NP

t 01786 814 814
f 01786 814 812
e scotland@ney.co.uk